Televes®

H30 series

CATV & DOCSIS3.0 Meter / Analyzer

Refs. 593101, 593102, 593103

1. Load Battery

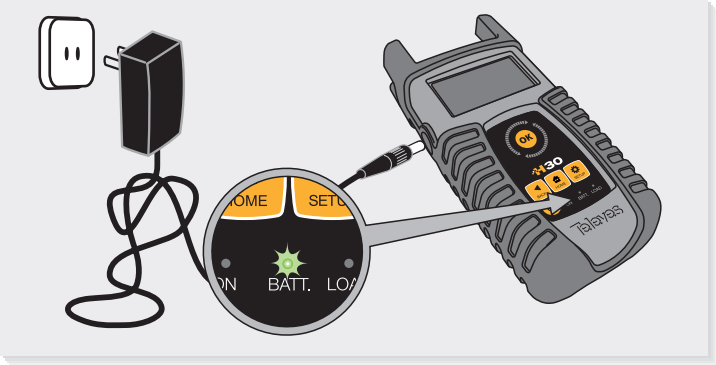

2. Power ON

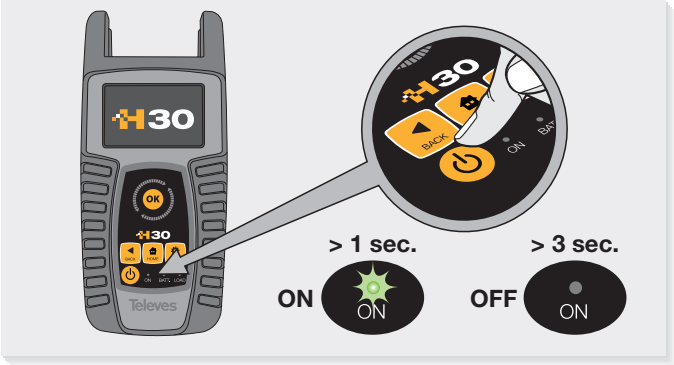

3. Buttons

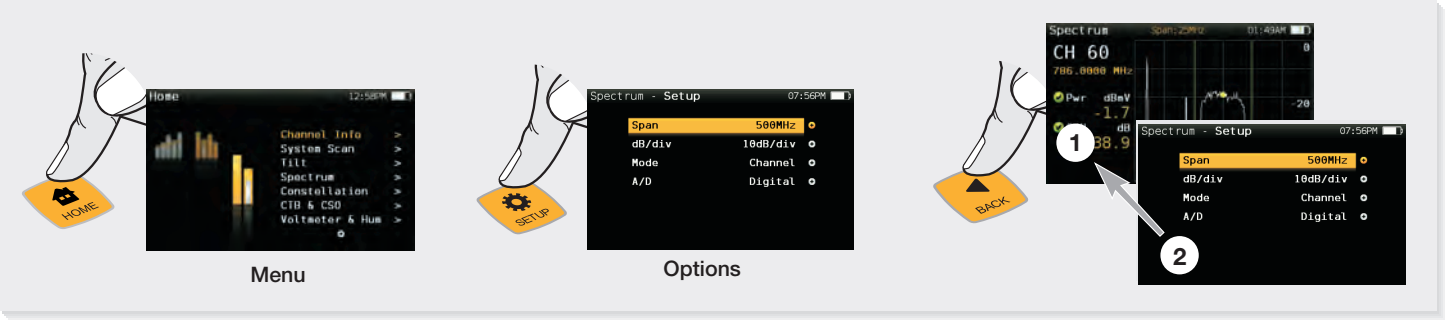

4. Menu

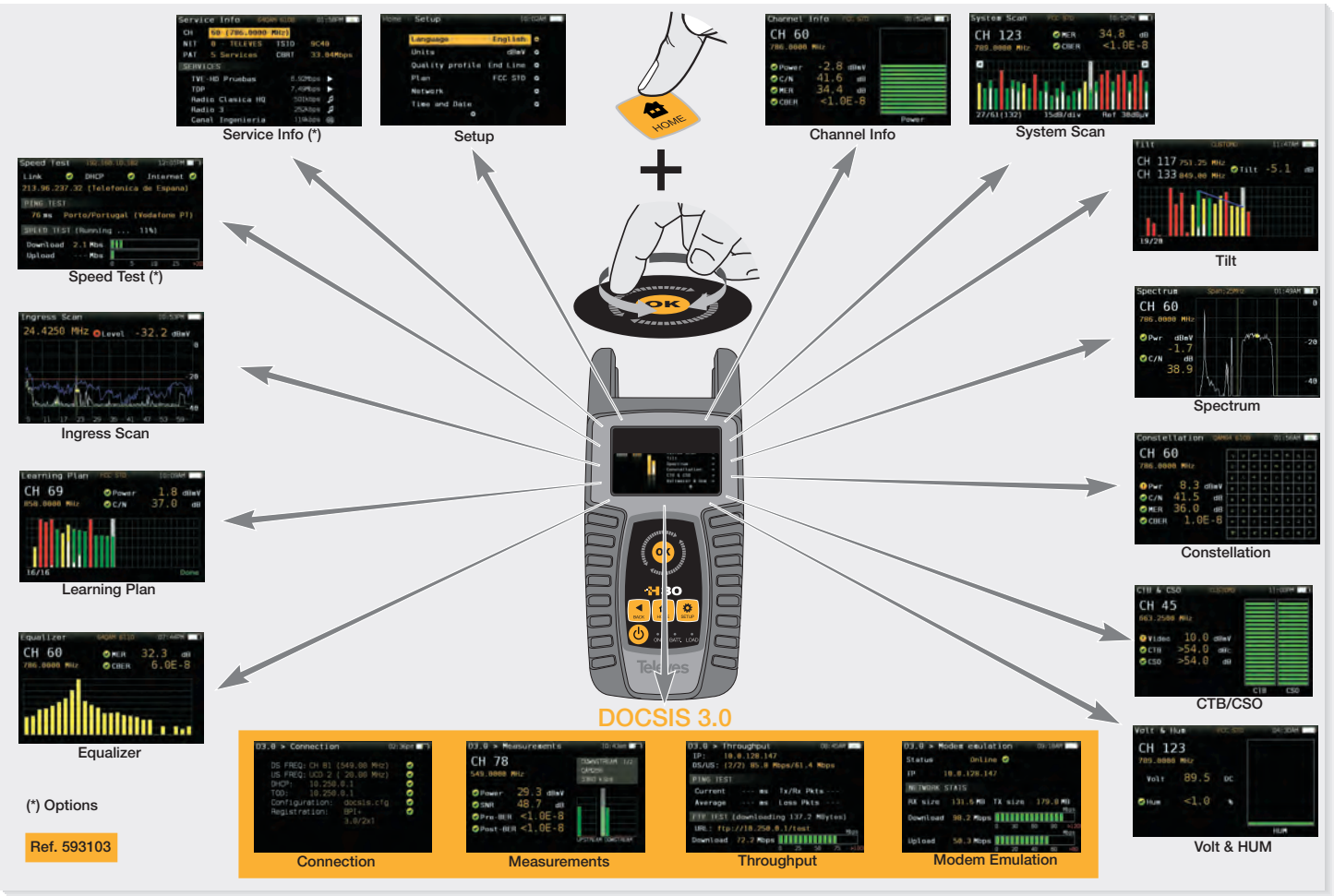

Purchase from: MULTICOM® www.multicominc.com 800-423-2594 407-331-7779

5. Remote control

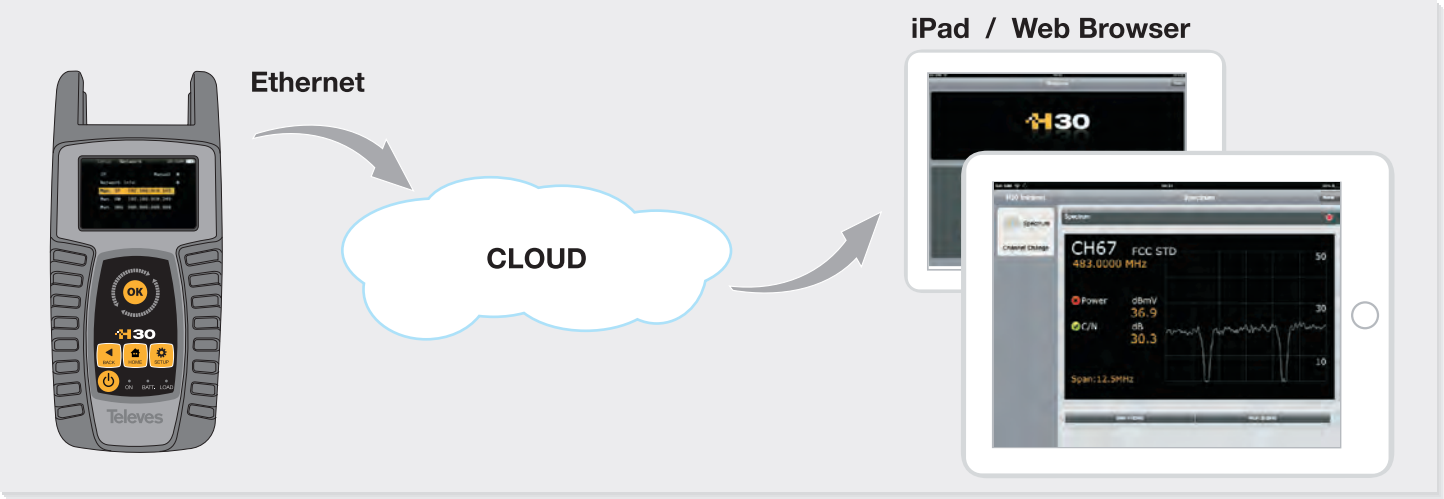

6. Network setup

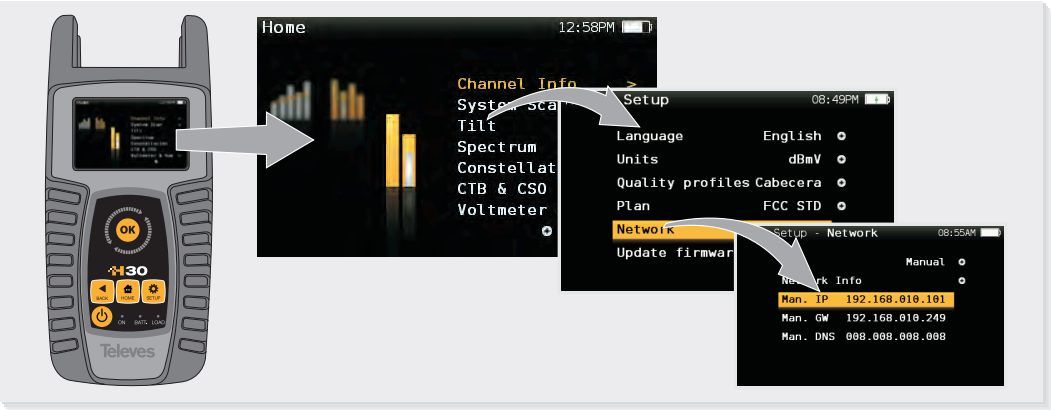

7. F-connectors options

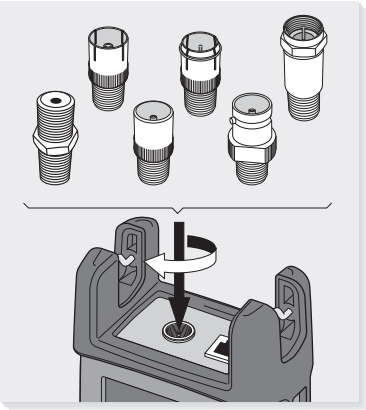

Technical Specifications	
Frequency	Range: 5 MHz to 1002 MHz Resolution: 50 KHz
Input	Impedance: 75Ω F-type connector
Frecuency Spectrum	Span: 2.5, 6.25, 12.5, 25, 62.5, 125, 250, 500 MHz, and Full dB/div: 5 and 10 dB Automatic and manual reference level
Ingress Scan	Range: 5 to 85 MHz 5 to 68 MHz 5 to 42 MHz
Digital Channel	Demodulation Type: ITU-T J.83 Annex A/B/C 16/32/64/128/256 QAM, QPSK. Symbol Rate: 2 to 6.9 MS/sec Complete automatic detecction of modulation parameters. DFE filter On/Off Measurements: Power Measurement: Level Range -30 to 60 dBmV Accuracy: ±2 dB Resolution: 0.1 dB C/N: up to 45 dB MER: up to 40dB Accuracy: ±2 dB PreBER and Post BER (Annex B): 1,0E-3 to 1,0E-8 BER (Annex A/C): 1.0E-3 to 1.0 E-8
Constellation	Display: 4, 16, 32, 64, 128 and 256 QAM / Zoom capability
Equalizer	Graphical representation of the channel equalizer
Analog Measurement	Level Measurement: -30 to +60 dBmV Accuracy: ±2 dB Resolution: 0.1 dB V/A up to 30 dB C/N up to 54 dB CTB and CTO
Learning plan	Up to 16 user defined channel plans
System scan	Up to 100 channels (analog and digital) Graphical representation.
TILT	Up to 100 channels
Profiles	Up to 10 profiles
Voltmeter and HUM	Range: 9 V to 150 V. Accuracy: ± (0.5V +1%) Range 2 to 5%
Cable modem	DS up to 8 channels. US up to 4 channels
General Specifications	
Display	Color TFT 2.8" 400 * 240
Weight	Ref. 593101&593102: 12.12lb (510g) / Ref. 593103: 1.39lb (632.2g)
Dimensions	175 x100 x 52mm (HxWxD)
AC Adaptor	Input: 100-240V 50-60Hz Output: 12VDC, 2A
Battery	LiIon 7.2VDC 2300mAh
Operating Temperature	23ºF to 104ºF (-5ºC to 45ºC)
Communication Interface	Ethernet Automatic software updates
Storage	400 MB for measurements

Subjects may change without notice

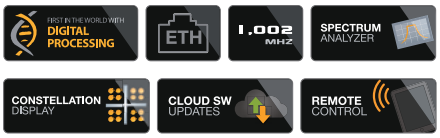

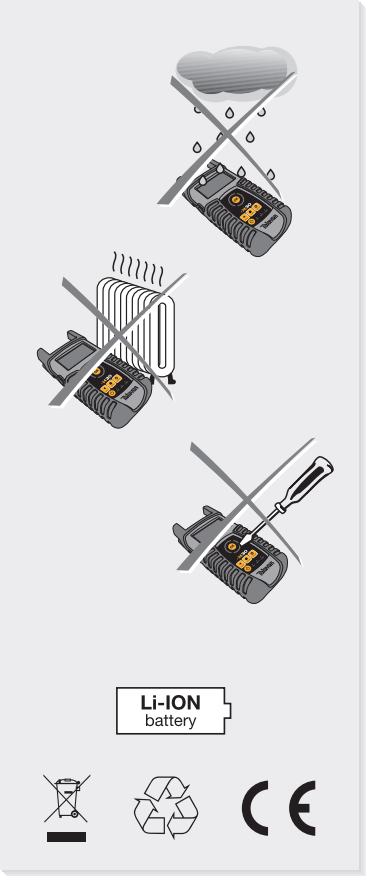

Purchase from: MULTICOM® www.multicominc.com 800-423-2594 407-331-7779 Televes