Hisense

LTF2302 SFP+ Bidirectional Transceiver

10Gb/s 20km

Product Description

The LTF2302 SFP+ transceiver is intended for 20km reach service from 9.95Gb/s to 10.3125Gb/s 1270nm/1330nm single mode high-speed communications equipment where low-cost, extraordinary performance and reliability are essential. It consumes low power, operates over the industrial temperature ranges and employs a single 3.3V DC power supply. The low jitter and low bit error rate optical assembly features a 1270nm DFB laser transmitter and a PIN/TIA receiver. It incorporates the SFP+ MSA LVTTL Loss of Signal (Rx_LOS), Tx Fault (Tx_FAULT), MOD_ABS and Tx Disable (Tx_DIS) monitor and control functions. The differential AC coupled Tx and Rx data interfaces are CML compatible. The device is Class I laser safety compliant.

Applications

- High-speed storage area networks
- Computer cluster cross-connect
- Custom high-speed data pipes
- IEEE 802.3ae Base-LR/LW

Features

- Single 3.3V DC Supply
- 20km Reach
- 2x10 SFP+ Package Outline
- Single Fiber, Full Duplex Operation
- LC Optical Interface
- Dual Wavelength (WDM) Bidirectional Transmission
- 9.95 to 10.3125Gb/s Data Rate
- 1270nm CW Mode DFB Optical Transmitter
- 1330nm CW Mode PIN Optical Receiver
- Case Operating Temperature Ranges:
  - Industrial: -40ºC to 85ºC
- Data and Control Interfaces

Tx_Data	CML/AC Coupled
Rx_Data	CML/AC Coupled
Tx_Dis	LVTTL
Tx_Fault	LVTTL
Rx_Los	LVTTL
SCL	LVTTL Serial Clock Input
SDA	LVTTL Serial I/O

- BER $<10^{-12}$ (PRBS 2^{31}-1, 10.3125Gb/s)
- RoHs Compliance

Purchase from Multicom MULTICOM www.multicominc.com | 800-423-2594

Ordering Information		
Part Number	**Case Operating Temperature**	**Customer Orderable Model Number**
LTF2302-BH+	-40 to 85ºC	**XCVR-AE-SFP+-SBD-1270-20KM-IA**

Absolute Maximum Ratings					
Parameter	**Symbol**	**Min**	**Max**	**Units**	**Notes**
Storage Ambient Temperature	T_{stg}	-40	+85	ºC	Exceeding the Absolute Maximum Ratings may cause irreversible damage to the device. The device is not intended to be operated under the condition of simultaneous Absolute Maximum Ratings, a condition which may cause irreversible damage to the device.
Relative Humidity - Storage	RH_S	0	95	%	
Relative Humidity - Operating	RH_O	0	85	%	
Module Supply Voltage	V_{CC}	-0.5	+4.0	V	

Recommended Operating Conditions						
Parameter	**Symbol**	**Min**	**Typ**	**Max**	**Units**	**Notes**
Case Operating Temperature	T_{case}	-40	+25	+85	ºC	Temperature Range = H
Module Supply Voltage	V_{CC}	3.14	3.3	3.46	V	
Module Supply Current	I_{IN}	-	-	400	mA	

Transmitter Electrical Characteristics						
Parameter	**Symbol**	**Min**	**Typ**	**Max**	**Units**	**Conditions / Notes**
Tx_Data Differential Input Voltage	V_{IN}	180	-	700	mV	Internally AC coupled and terminated
Tx Differential Input Impendence	Z_{IN}	-	100	-	Ω	
Tx_DISABLE Logic HIGH State	V_{TDH}	2.4	-	V_{CC}	V	
Tx_DISABLE Logic LOW State	V_{TDL}	0	-	0.8	V	
Tx_FAULT Logic HIGH State	V_{TFH}	2.4	-	V_{CC}	V	
Tx_FAULT Logic LOW State	V_{TFL}	0	-	0.8	V	

Purchase from Multicom MULTICOM www.multicominc.com | 800-423-2594

Receiver Electrical Characteristics						
Parameter	**Symbol**	**Min**	**Typ**	**Max**	**Units**	**Conditions / Notes**
Rx_Data Differential Output Voltage	V_{OUT}	300	-	850	mV	Internally AC coupled
Rx Differential Output Impedance	Z_{OUT}	-	100	-	Ω	
Rx_LOS Logic HIGH State	V_{RLH}	2.4	-	V_{CC}	V	Rx Loss of Signal
Rx_LOS Logic LOW State	V_{RLL}	0	-	0.8	V	Rx Normal

Transmitter Optical Characteristics						
Parameter	**Symbol**	**Min**	**Typ**	**Max**	**Units**	**Notes**
Laser Type			1270nm DFB			
Transmitter Signal Rate		9.95	10.3125	-	Gb/s	
Average Output Power	P_{OUT}	-4.2	-	4	dBm	
Optical Center Wavelength	λ	1260	1270	1280	nm	
Spectral Width @ -20dB	Δλ	-	-	1	nm	
Side Mode Suppression Ratio	SMSR	30	-	-	dB	
Extinction Ratio	ER	3.5	-	-	dB	
$RIN_{12}OMA$	RIN	-	-	-128	dB/Hz	
Transmitter and Dispersion Penalty	TDP	-	-	3.2	dB	

Receiver Optical Characteristics						
Parameter	**Symbol**	**Min**	**Typ**	**Max**	**Units**	**Notes**
Receiver Type			PIN			
Receiver Signal Rate		9.95	10.3125	-	Gb/s	
Optical Center Wavelength	λ	1320	1330	1340	nm	
Receiver Sensitivity	P_{IN}	-	-	-14.4	dBm	BER<10^{-12}, PRBS 2^{31}-1
Receiver Optical Overload	P_{IN}(SAT)	0.5	-	-	dBm	
Receiver Reflectance	RFL	-	-	-12	dB	
Rx_LOS of Signal - Assert	P_A	-30	-	-	dBm	
Rx_LOS of Signal - De-assert	P_D	-	-	-16	dBm	
Rx_LOS of Signal - Hysteresis	P_{Hy}	0.5	-	6	dB	

Purchase from Multicom MULTICOM www.multicominc.com | 800-423-2594

PIN Assignment

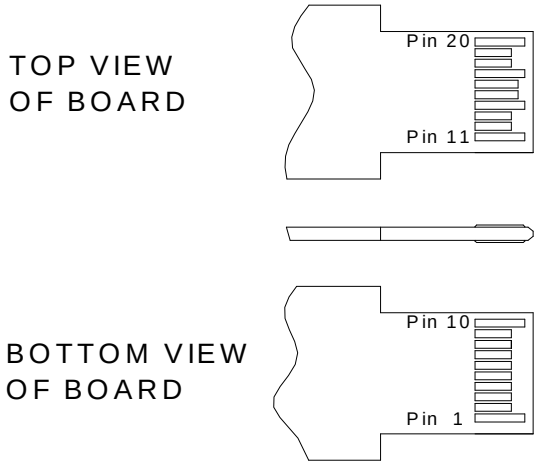

PIN Description			
PIN	**Symbol**	**Description**	**Notes**
1	V_{EET}	Transmitter Ground	
2	T_{FAULT}	Transmitter Fault.	1
3	T_{DIS}	Transmitter Disable. Laser output disabled on high.	
4	SDA	2-wire Serial Interface Data Line (MOD-DEF2)	
5	SCL	2-wire Serial Interface Clock (MOD-DEF1)	
6	MOD_ABS	Module Absent, connected to V_{EET}	
7	RS0	Rx Rate Select: Not implement.	2
8	LOS	Loss of Signal indication. Logic 0 indicates normal operation.	1
9	RS1	Tx Rate Select: Not implement	2
10	V_{EER}	Receiver Ground	
11	V_{EER}	Receiver Ground	
12	RD-	Receiver Inverted DATA out. AC Coupled	
13	RD+	Receiver Non-inverted DATA out. AC Coupled	
14	V_{EER}	Receiver Ground	
15	V_{CCR}	Receiver Power Supply	
16	V_{CCT}	Transmitter Power Supply	
17	V_{EET}	Transmitter Ground	
18	TD+	Transmitter Non-Inverted DATA in. AC Coupled.	
19	TD-	Transmitter Inverted DATA in. AC Coupled.	
20	V_{EET}	Transmitter Ground	

Notes

1. Shall be pulled up with 4.7k-10k ohms to a voltage between 3.15V and 3.6V on the host board.
2. The pins are pulled low to V_{EET} with a >30k resistor in the module.

Purchase from Multicom MULTICOM www.multicominc.com | 800-423-2594

Memory Map(Page 0xA0 HEX, Unlisted Fields are Blank/Empty, Memory is WRITE PROTECTED, SDA Communications is READ ONLY)				
Address	**Size (Byte)**	**Name of Field**	**Description**	**Values (HEX)**
0	1	Identifier	SFP	03
1	1	Extended Identifier	Extended Identifier	04
2	1	Connector	Connector Type = LC	07
3-10	8	Transceiver	10G Base LR	20 00 00 00 00 00 00 00
11	1	Encoding	Encoding Type = 64B/66B	06
12	1	BR, Nominal	Nominal Bit Rate 10.3Gb/s	67
13	1	Reserved	Reserved	00
14	1	Length(9μm)-km	20km Link Length in Kilometers / SMF	14
15	1	Length (9μm)-100m	20km Link Length in Hundreds of Meters / SMF	C8
16	1	Length (50μm)-10m	50-micron MMF Link Length = N/A	00
17	1	Length (62.5μm)-10m	62.5-micron MMF Link Length = N/A	00
18	1	Length (Copper)	Copper Link Length = N/A	00
19	1	Reserved	Reserved	00
20-35	16	Vendor name	Hisense	ASCII Format
36	1	Reserved	Reserved	00
37-39	3	Vendor OUI	SFP Vendor IEEE Company ID	00 01 47
40-55	16	Vendor PN	The part number in the ordering information	ASCII Format
56-59	4	Vendor Revision Number	Programmed by Factory	Programmed by Factory
60 to 61	1	Wavelength	Laser Wavelength = 1270nm	04 F6
62	1	Reserved	Reserved	00
63	1	CC_BASE	Check sum of bytes 0-62	Programmed by Factory
64-65	2	Transceiver Options	1. Rx_LOS 2. Tx_Fault 3. Tx_DIS	00 1A
66	1	BR, max	10%	0A
67	1	BR, min	10%	0A
68-83	16	Vendor SN	Programmed by Factory	Programmed by Factory
84-91	8	Date code	Year,Month,Day	Programmed by Factory
92	1	Monitoring Type	Internally Calibrated Received power measurement type-Average Power	68
93	1	Enhanced Options	1. Optional Alarm/warning Implemented 2. Soft Tx_FAULT Monitor 3. Soft Rx_LOS Monitor	B0
94	1	Compliance	Revision Implemented	03
95	1	CC_EXT	Check sum of bytes 64-94	Programmed by Factory
96-127	32	Vendor Specific	Vendor Specific	Programmed by Factory
128-255	128	Vendor Specific	Vendor Specific	Programmed by Factory

A2 (hex) Digital Table - Summary of Parameters in the A2 (hex) Parametric Table

The data in the parameter tables are compared with the data in the measured data tables in order to create a warning or alarm status bit

The Warning or Alarm bit is set when the parameter drops below or exceeds the Low or High values stored in memory.

A2 (HEX) Address Table for Alarm and Warning Data														
Parameter	Alarm Threshold Data				Warning Threshold Data				Measured Values		Alarm Bit (Set) Address + Position		Warning Bit (Set) Address + Position	
	High Value		Low Value		High Value		Low Value							
	MSB	LSB	MSB	LSB	MSB	LSB	MSB	LSB	MSB	LSB	High	Low	High	Low
Temperature	00	01	02	03	04	05	06	07	96	97	112 (7)	112 (6)	116 (7)	116 (6)
Vcc	08	09	10	11	12	13	14	15	98	99	112 (5)	112 (4)	116 (5)	116 (4)
Tx Bias	16	17	18	19	20	21	22	23	100	101	112 (3)	112 (2)	116(3)	116 (2)
Tx Output	24	25	26	27	28	29	30	31	102	103	112 (1)	112 (0)	116 (1)	116 (0)
Rx Input	32	33	34	35	36	37	38	39	104	105	113 (7)	113 (6)	117 (7)	117 (6)

Purchase from Multicom MULTICOM www.multicominc.com | 800-423-2594

Electrical Interface

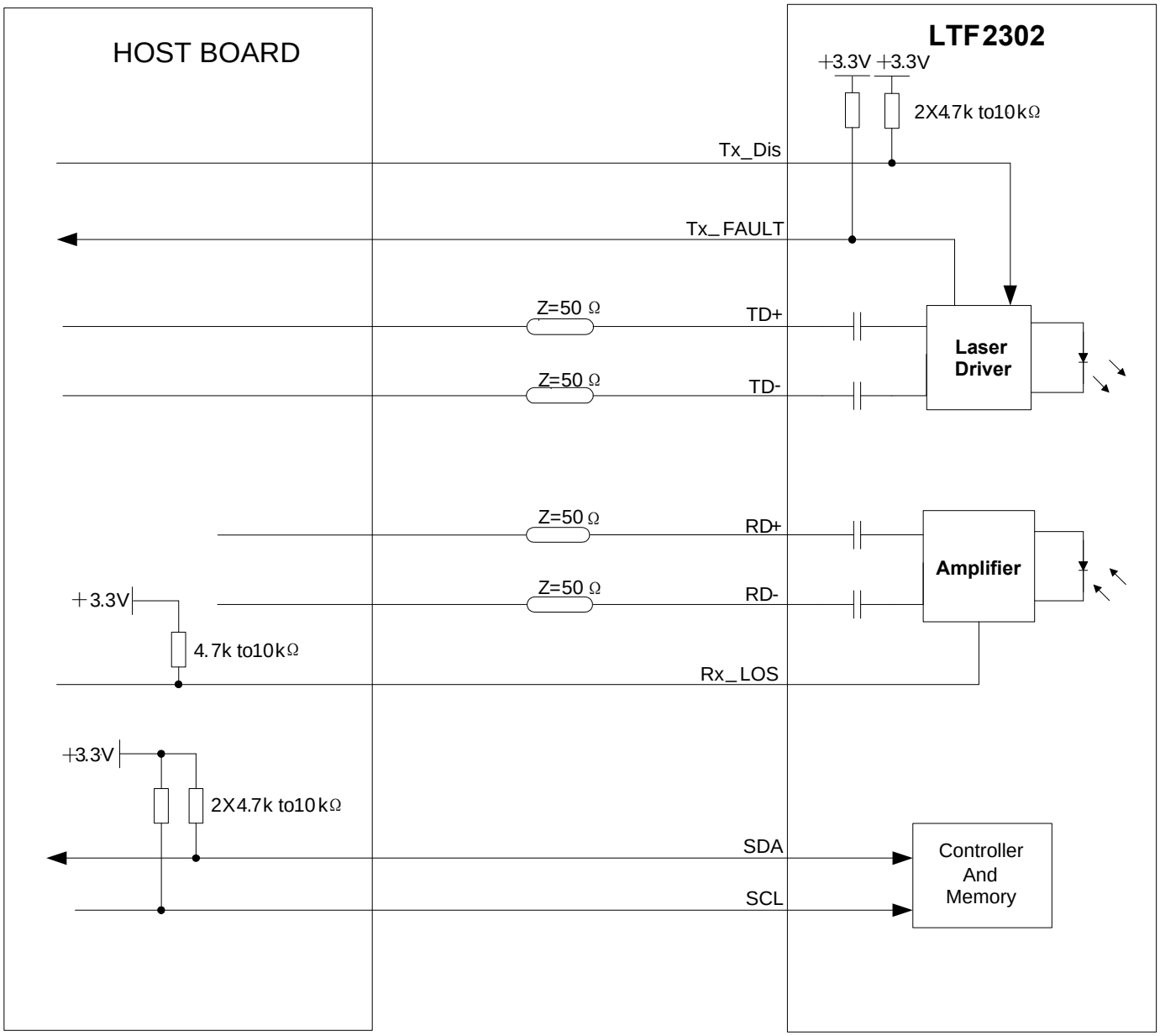

Purchase from Multicom MULTICOM www.multicominc.com | 800-423-2594

Hisense

FP+ Bidirectional Transceiver

10Gb/s 20km

Recommended PCB Layout

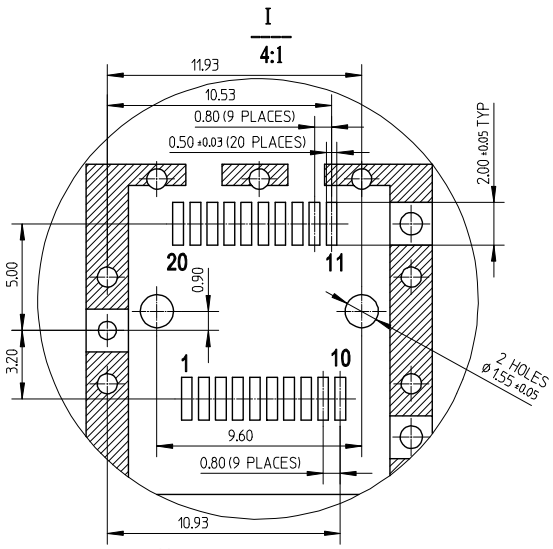

Notes:
1. Datum and basic dimensions established by customer
2. Pads and vias are chassis ground, 11 places
3. Thru holes,plating optional

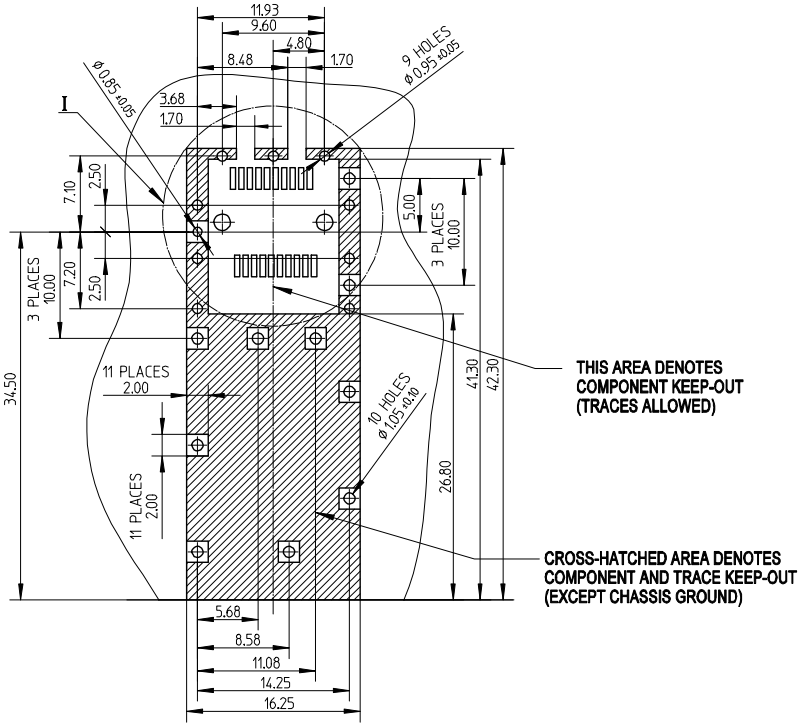

Recommended Front Panel Layout

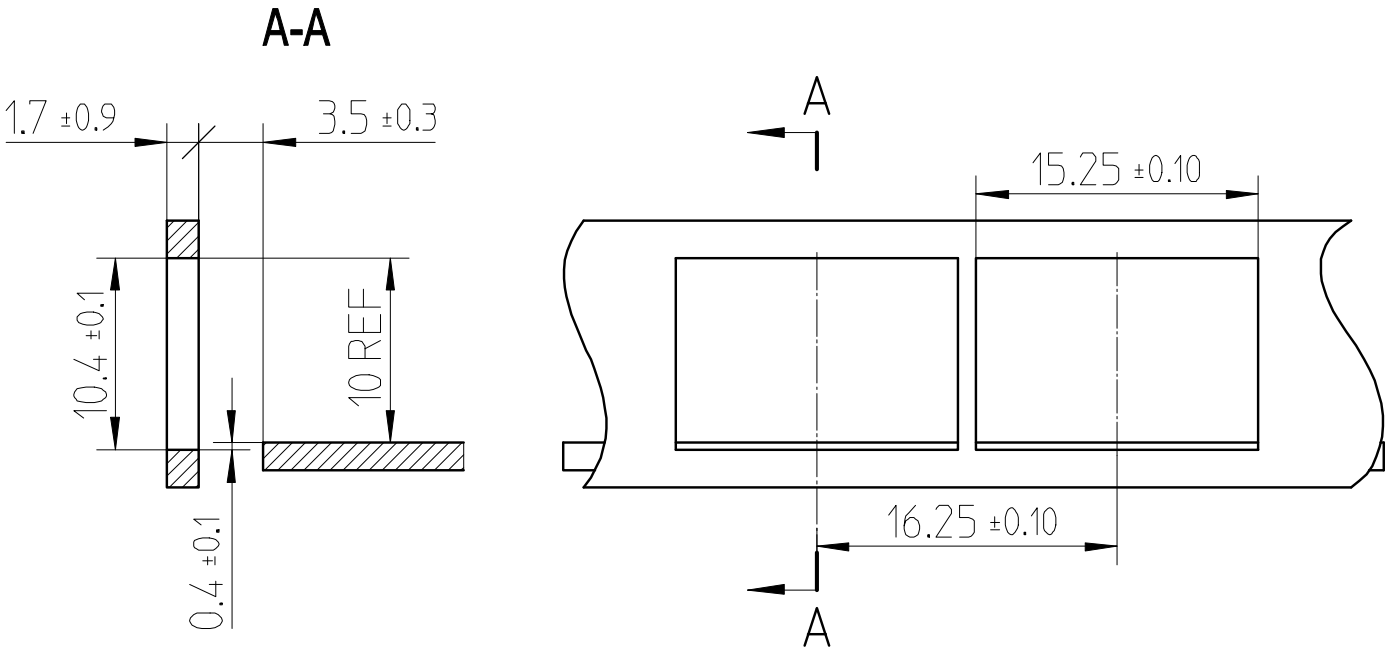

Hisense

SFP+ Bidirectional Transceiver

10Gb/s 20km

Mechanical Dimensions

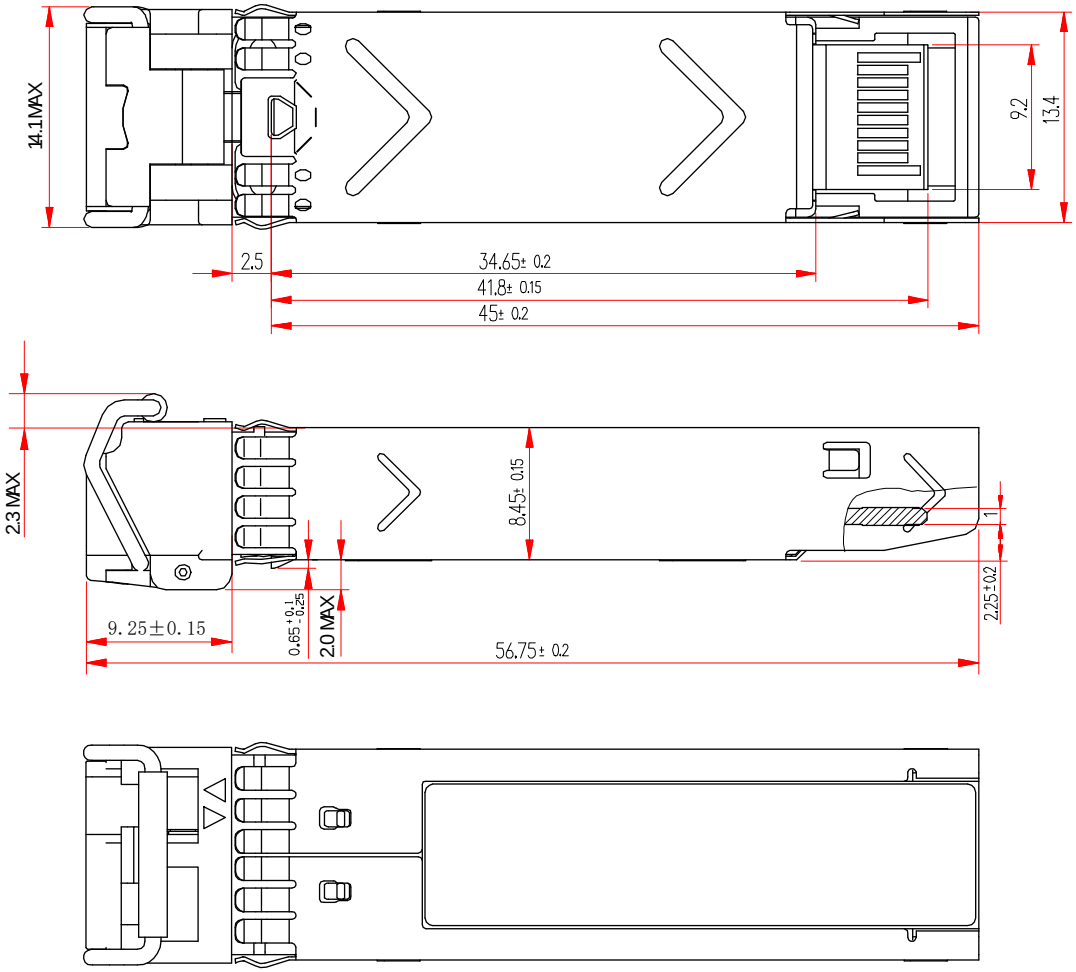

Dimensions are mm
Tolerance +/-0.1mm

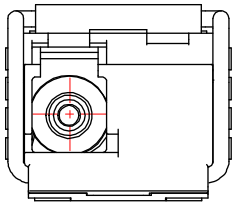

Customized Label

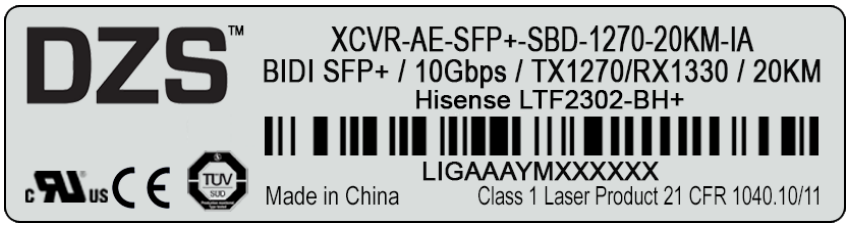

Purchase from Multicom MULTICOM www.multicominc.com | 800-423-2594